Drawing

	Batch #	Appliance part#
Hendi B.V. Steenoven 21 3911 TX Rhenen The Netherlands	902473 until 902505	239766
	Description	
	Induction wok	

Date	29-01-2013	**Revision #**	Revision version 1.1
Revision	New version main pcb and control pcb.		

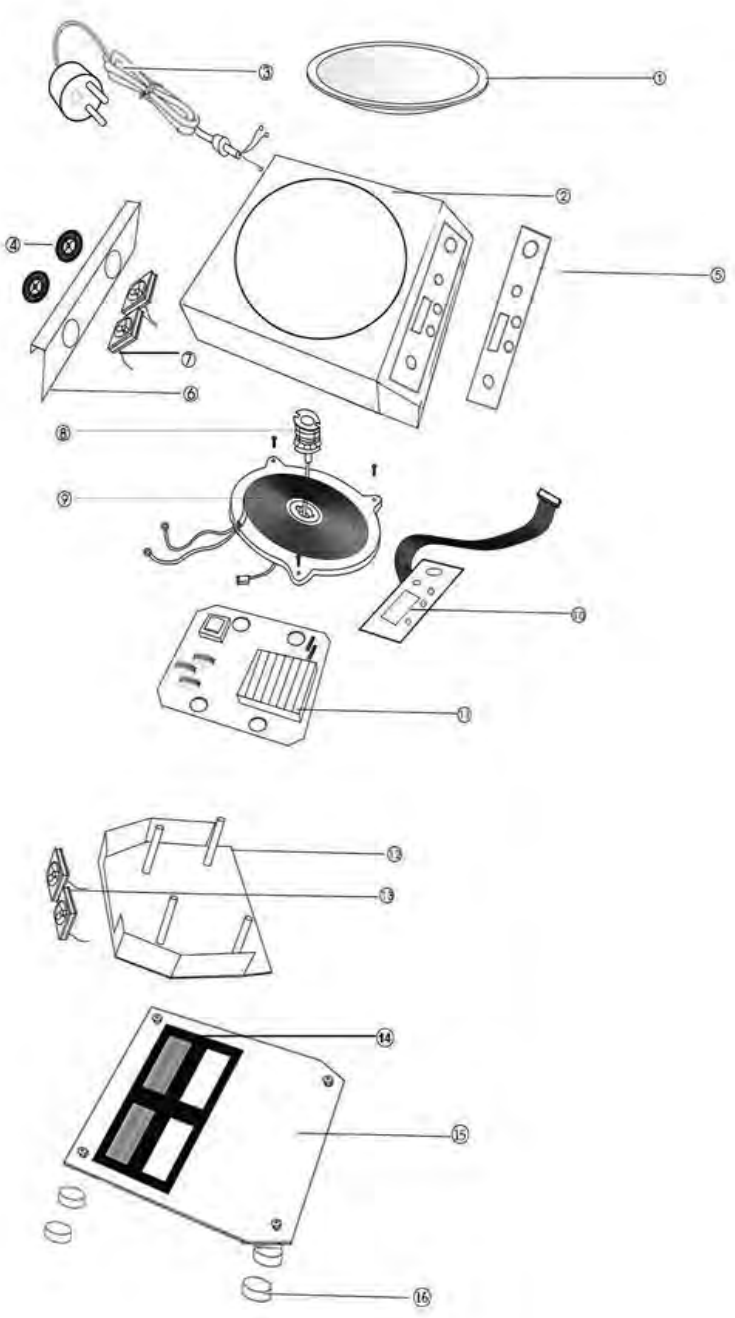

retail5.com.ua

Bill of materials (BOM)

Hendi B.V.
Steenoven 21
3911 TX Rhenen
The Netherlands

Batch #	Appliance part#
902473 until 902505	239766
Description	
Induction wok	

Date	29-01-2013	**Revision #**	Revision version 1.1
Revision	New version main pcb and control pcb.		

Item	Description	Part#	Quantity	Remark	Picture
1	Ceramic wok	nss	1	Available as 916711	
2	Upper housing	916711	1	Incl item 1	
3	Power cord	929353	1		
4	Cover Fan	n/a	2		
5	Display sticker	916742	1		
6	Bracket	n/a	1		
7	Fan 18V 80x80mm	901441	2		
8	Sensor	929735	1		
9	Main coil	916759	1		
10	Control pcb	916735	1		
11	Main pcb	916728	1		
12	Plastic bracket	n/a	1		
13	Fan 18V 80x80mm	901441	2		
14	Filter	929759	1		
15	Bottom cover	n/a	1		
16	Foot	901373	4		

n/a -> not available **nss -> not sold separately**

retail5.com.ua

Wiring diagram

	Batch #	Appliance part#
Hendi B.V. Steenoven 21 3911 TX Rhenen The Netherlands	902473 until 902505	239766
	Description	
	Induction wok	

Date	29-01-2013	**Revision #**	Revision version 1.1
Revision	New version main pcb and control pcb.		

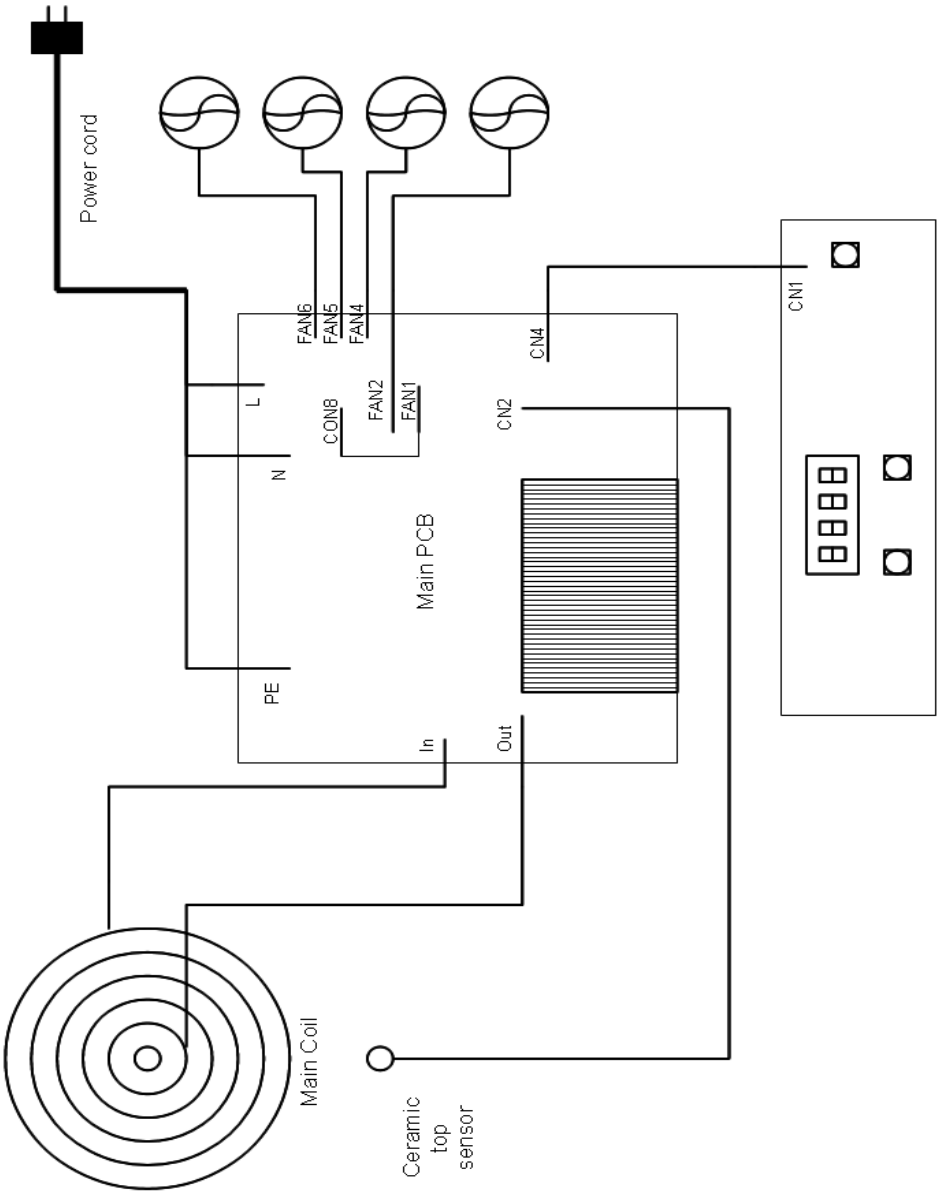

retail5.com.ua